EASY MAINTENANCE

ENGINE COMPARTMENT

STEERING AXLE

EXPERIENCE MAKES THE DIFFERENCE

FANTUZZI TEAM MATERIAL HANDLING S.p.A.
Via G. Galilei, 13 - 42041 Brescello (RE) Italy
Ph. +39 0522 480625 - Fax +39 0522 480160 - info@ftmh.it - www.ftmh.it
P. Iva/CF 02618470351 - VAT IT02618470351

FT 45-60
FT 45-65
FT 45-70

EXPERIENCE MAKES THE DIFFERENCE

DIMENSIONS

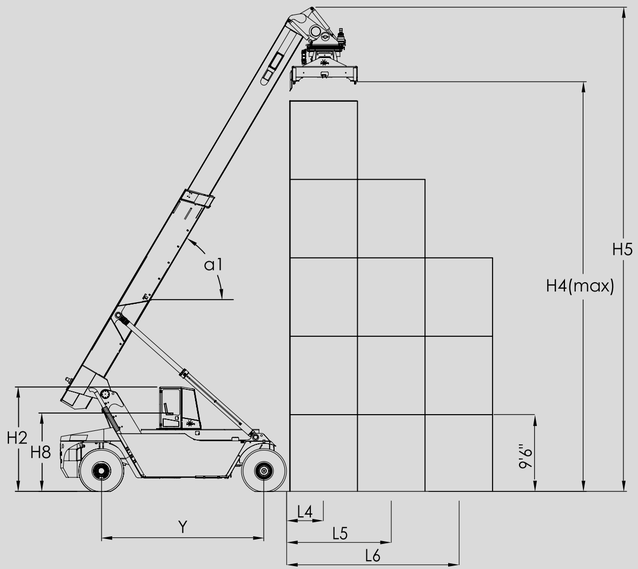

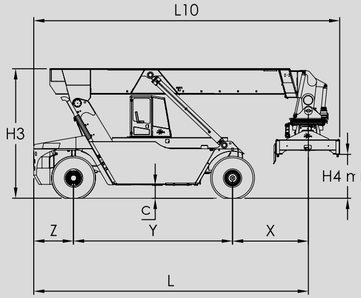

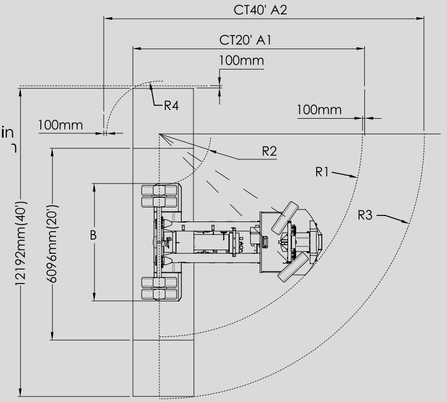

Denomination				FT 45-60	FT 45-65	FT 45-70
Lifting capacity	1	Q_{L4}	Nominal capacity at L4	kg	45000	45000	45000
	2	Q_{L5}	Nominal capacity at L5	kg	32000	36000	40000
	3	Q_{L6}	Nominal capacity at L6	kg	16000	20000	22000
Lifting speed	4		Unladen	m/s	0,40	0,40	0,40
	5		Laden	m/s	0,24	0,24	0,24
Lowering speed	6		Unladen	m/s	0,34	0,34	0,34
	7		Laden	m/s	0,42	0,42	0,42
Driving speed	8		Unladen	km/h	25	25	25
	9		Laden	km/h	23	23	23
Gradeability	10		Unladen	%	30	30	30
	11		Laden	%	25	25	25
Towbar pull	12		Maximum	KN	320	320	320
Stability DIN 15019	13		Yes/No		YES	YES	YES
Total weight	14		Unladen	kg	75000	76500	79500
	15		Laden	kg	120000	121500	124500
Drive axle load	16		Unladen L4 = mm 2100	kg	38500	38600	40500
	17		Laden L4 = mm 2100	kg	106600	104000	104500
Steer axle load	18		Unladen L4 = mm 2100	kg	36500	37900	39000
	19		Laden L4 = mm 2100	kg	13400	17500	20000
Engine	20		Brand/Model Tier 4 final		VOLVO TAD 1170 VE	VOLVO TAD 1170 VE	VOLVO TAD 1171 VE
	21		Fuel/type of engine		DIESEL	DIESEL	DIESEL
	22		Continuous power	Kw/hp	235/320	235/320	265/360
	23		Peak torque	Nm/rpm	1550/1260	1550/1260	1750/1290
	24		Revolution per minute	rpm	2100	2100	2100
	25		Number of cilynders / Diplacement	n°/cm^3	6/10840	6/10840	6/10840
	26		Specific fuel consumption	l/h	17/19	17/19	19/21
	27		Alternative engine - Tier III A			CUMMINS QSM11 - VOLVO TAD 1140VE	
Alternator	28		Power	A	110	110	150
Battery	29		Voltage / Capcity	V/Ah	24/200	24/200	24/200
Transmission	30		Brand / Model		DANA-CLARK 36000	DANA-CLARK 36000	DANA TE 30
	31		Clutch Type - Gearbox			HYDRODINAMIC - TORQUE CONVERTER	
	32		Alternative transmission		DANA TE 30	DANA TE 30	DANA TE 30
	33		Nr of Speeds F/R		4/4 - 5/3	4/4 - 5/3	5/3
Drive axle	34		Brand		KESSLER	KESSLER	KESSLER
	35		Model		D102	D102	D106
	36		Type		RIGID	RIGID	RIGID
Tyres	37		Drive axle	N°	4	4	4
	38		Steer axle	N°	2	2	2
	39		Dimensions / ply (front / rear)	N°	18,00-25 (PR 40)	18,00-33 (PR 40)	18,00-33 (PR 40)
	40		Type		PNEUMATIC	PNEUMATIC	PNEUMATIC
	41		Inflating pressure	bar	10	10	10
	42		Ground pressure	kg/cm^2	10	10	10
Steer axle	43		Brand/ Type		OMCI / OSCILLATING - MONOCYLINDER		
Brakes system	44		Drive axle		WET DISC BRAKES - HYDRAULIC OPERATED		
	45		Parking brakes		DRY DISC ON AXLE SHAFT		
Hydraulic system	46		Pumps type		2 TRIPLE GEAR PUMPS or 2 VARIABLE DISPLACEMENT PUMPS "PARKER"		
	47		Distributor type		N. 1 HIGH CAPACITY MAIN DISTRIBUTOR		
	48		Filtration		10 MICRON	10 MICRON	10 MICRON
	49		Hydraulic oil cooling system		YES	YES	YES
	50		Brakes oil cooling system		YES	YES	YES
	51		Max working pressure	bar	250	250	250
Cabin	52		Noise level	dBA	72	72	72
	53		Mechanical sliding	mm	2350 STD	2350 STD	2350 STD
	54		Hydraulic sliding	mm	2350 OPT	2350 OPT	2350 OPT
Tanks capacity	55		Hydraulic oil	L	850	850	850
	56		Fuel diesel	L	580	580	580
	57		Ad - blue	L	45	45	45
Truck safeties	58		Electronic overload device with weight indicator		YES	YES	YES
	59		Lock valves with speed limiter on cylinders		YES	YES	YES
	60		Dead man handle		YES	YES	YES
	61		Inhibition F/R gearshift with machine in motion		YES	YES	YES
	62		Parking brake engagement if pressure drops		YES	YES	YES
Truck dimensions	63	A1	90° turning, 20' container	mm	11200	11700	12200
	64	A2	90° turning, 40' container	mm	13500	13600	13900
	65	L10	Truck length	mm	11500	12000	12500
	66	L	Truck length to container centre	mm	10280	10780	11280
	67	Z	Distance to rear axel	mm	1480	1480	1480
	68	B	Truck width	mm	4200	4200	4500
	69	H2	Cabin height	mm	3850	3950	3950
	70	H8	Seat height	mm	2700	2800	2800
	71	X	Load center from front axle	mm	2900	2800	2800
	72	Y	Wheelbase	"	6000	6500	7000
	73	L4	Distance front of wheel to centre row 1	"	1400/2100	1400/2000	1400/2000
	74	L5	Distance front of wheel to centre row 2	"	3850	3850	3850
	75	L6	Distance front of wheel to centre row 3	"	6350	6350	6350
	76	R1	Turning radius, outer	"	8300	8800	9300
	78	R2	Turning radius, inner	"	1500	1500	1500
	80	R3	Turning radius, 40' container, outer	"	9500	9500	9500
	81	R4	Turning radius, 40' container, inner	"	4000	4000	4000
	82	C	Ground clearance	"	470	570	570
Boom	83	H4	Height under twist lock, max/min	mm	15100/1670	15200/1770	15200/1770
	84	H3	Boom height	"	5000	5100	5100
	85	H5	Boom height max	"	18000	18100	18100
	86	a1	Boom angle	Deg	60	60	60
Spreader	87		Width, min - max	mm	6050-12192	6050-12192	6050-12192
	88		Rotation angle	Deg	- 95°/+185°	- 95°/+185°	- 95°/+185°
	89		Side shift	mm	800R - 800L	800R - 800L	800R - 800L
	90		Side sloping (mechanical)	Deg	+/-3°	+/-3°	+/-3°

LOAD DIAGRAM

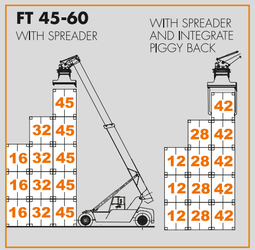

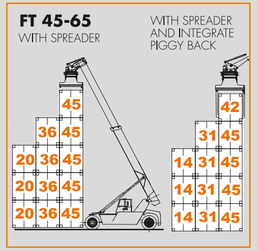

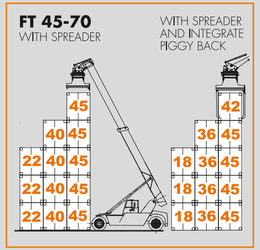

OPTIONAL AVAILABLE

- Artic package (-40°)
- Automatic greasing system (machine and spreader)
- Spreader hydraulic side sloping (+/- 6°)
- Front or rear view cameras
- Spreader with piggy back configuration
- Hydropneumatic suspensions on rear axle
- Spreader stop at 30'
- Dumping control
- Certified weighing system as for Solas convention
- Sliding cab with hydraulic control
- Pneumatic adjustable seat
- Different attachments for handling General cargo (hooks - magnet - clamps - vacuum)
- Eco power for low fuel consumption
- Communication system
- Fire suppression system

WHAT MAKES THE DIFFERENCE

TELESCOPIC SPREADER
- Single Boom design with cylinders for positioning 20'-40' containers placed outside the structure
- Anti-collision system
- Nr.2 rotating hydraulic motors and brakes
- Nr.4 Floating twistlocks
- Wide and strong ring gear "Roth Hart" made in Italy
- High Quality steel WELDOX 700 E for telescopic frames (male and female) and DOMEX 600 MC for the fixed frame
- Mechanical and electric safeties
- Led working lights for twistlock
- Large hole for twistlock service access

CABIN
- Manually operated
- High Comfort with adjustable seat
- All around great visibility
- Adjustable steering wheel column
- Secondary seat for passenger
- Air-recycling and particle filter system
- Joystick with "Dead-Man" security system positioned on armrest
- Two access doors
- Easy access to the cabin through comfortable stairs frame and anti-slippery steps
- Tempered side and back windows
- Stratified front and windshield glasses

TELESCOPIC BOOM
- Designed for heaviest duties
- High Quality steel: S355J2G3 European Made
- Nr.2 double acting lifting cylinders
- Nr.1 double acting extension cylinder easily dismountable for maintenance
- Centralized greaseable system
- Upper, down and side pads made of special "Nylatron" longlife and easily dismountable for maintenance
- Wide pin (160 mm diameter) with bushes and spherical bearing for easy fixing of the boom on the chassis – easy greaseable and long life granted.

HYDRAULIC SYSTEM
- Nr.2 Triple pumps, made Parker (USA); The Nr.4 Bigger pumps are dedicated to the main movements (lifting, extension, steering and spreader) meanwhile the other Nr.2 smaller pumps are dedicated to the brakes, brakes cooling and hydraulic oil cooling
- N.1high capacity main distributor for an optimized use of the engine's power with reduction of fuel consumption and increase of reachstacker performance
- Strong oil cooling system with big radiator and hydraulic motor to control the fan (electric motor for low temperature environment available as option)
- Nr.4 10 micron filters on return line
- Nr.1 filter on delivery line for brakes
- Electro valves made Parker / Rexroth
- Steering system made Danfoss
- Hydraulic hoses made Manuli and fittings type GIC 36° (fittings on demand ORFS)
- ALTERNATIVE PUMPS: N°2 DOUBLE PISTON PUMPS PARKER (USA)

ELECTRIC AND ELECTRONIC SYSTEM
- Load measurements through pressure sensors
- Static and dynamic stability control according to EU standards
- Color Display – size 7'' - Vertical maunt
- Operative black-box for handling cargo information
- Troubleshooting black-box
- Data Download through USB
- Different Language selectable
- Easy maintenance using access code
- Complete control of spreader function and safeties
- Can-bus system for engine and transmission control
- All components positioned for easy and fast maintenance
- Led working Lights
- Wirings suitable for all weather conditions